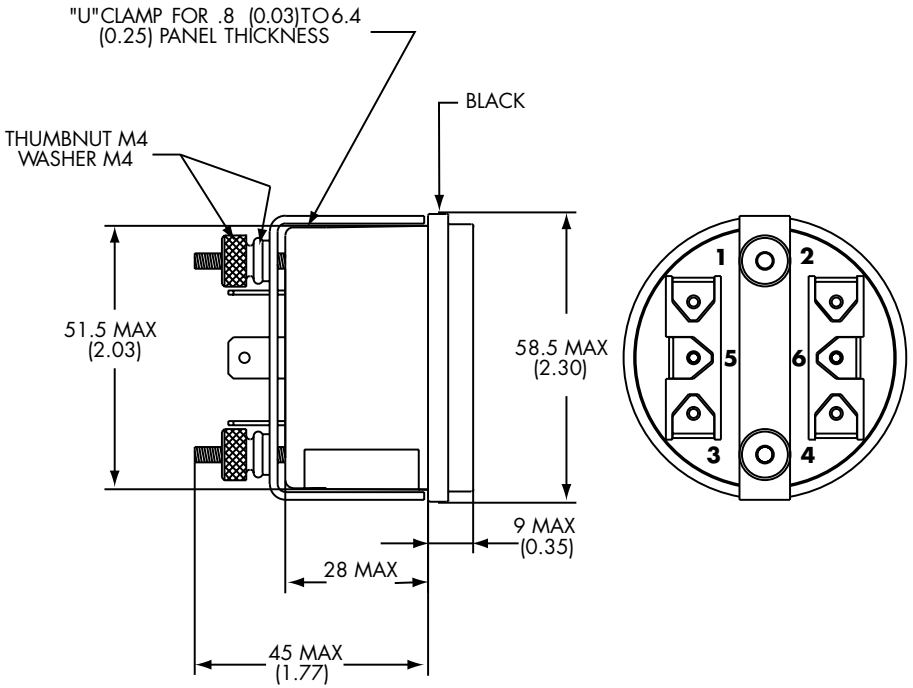Dimensions: mm (inches)