Digital Hydrometer

SBS-2500

INSTRUCTION MANUAL

Table of Contents

1 Introduction 4
2 Safety Measures 4
3 Description of the Instrument 5
3.1 SBS-2500 5
3.2 Display 5
3.3 Keys 5
4 Tutorial 7
4.1 Inserting batteries 7
4.2 Configuration 7
4.3 Test measurement 8
4.4 Adjustment 8
4.5 Cleaning 8
4.6 Switching off and on 8
5 Menu 9
5.1 Using the menu 9
5.2 Measurement Unit (Measure Unit) 10
5.3 Temperature Unit (Temp. Unit) 12
5.4 Measure Mode 12
5.5 Adjustment Mode (Calib. Mode) 12
5.6 Interface 12
5.7 Beep 12
5.8 Background Lighting and LCD-Contrast (LCD) 13
5.9 Automatic Switch-off (Power) 13
5.10 Software Version (Version No.) 13
5.11 Date & Time 13
5.12 Identification 13
6 Measurement 13
6.1 Procedure for proper measurement 13
6.2 Filling the measuring cell using the built-in sample pump 14
6.3 Filling the measuring cell using an external syringe 14
6.4 Measuring 15
6.5 Saving the results 15
6.6 Displaying and marking saved results 15
6.7 Printing and transferring results 16
6.8 Deleting results 17
7 Adjustment (cal) 17
7.1 Adjusting the measuring cell with water 17
7.2 Adjusting the measuring cell with a density standard 18
7.3 Adjusting the measuring cell with air 18
7.4 Adjusting the temperature display 19
8 Interface 20
8.1 IR printer settings 20
8.2 Data transfer to PC 20
8.3 Data format 21
9 Error Messages and Malfunctions 22
10 Cleaning and Maintenance 23
10.1 Cleaning the measuring cell 23
10.2 Cleaning the housing 23
10.3 Replacing the sample tube 23
10.4 Replacing the sample pump 23
11 Standard equipment 24
12 Technical data 25
13 Appendices 26

1. Introduction to the SBS-2500

The SBS-2500 is a portable measuring instrument suited for determining the density of liquids. The instrument uses the oscillating body method.

To fill the measuring cell the built-in sample pump or a syringe may be used. The results are automatically calculated into one of the following units: density, specific gravity, API degrees, Brix, % Alcohol, % H2SO4, Baumé, Plato, Proof or a user-defined unit. The value is then shown on the backlit display.

For exact measurements, it is imperative to correct the temperature's influence on the density. Depending on the selected unit the SBS-2500 carries out this result correction automatically. For this task, the instrument uses either internally-stored tables or one of the 10 temperature-compensation coefficients entered by the user.

The results, along with the sample identification, temperature, temperature-coefficient, date and time can be saved. Together with the instrument identification they can then, via the integrated infrared interface, be transferred to the computer or printed out on a printer.

2. Safety Measures

Measures for Your Protection and Operational Safety

	Do not work in an explosion-hazardous environment! The instrument housing is not gas tight. Otherwise, there is a risk of explosion from sparks and/or risk of corrosion by gasses which can seep in.
	• Always hold the end of the sample tube over a waste container! There is a risk of injury when emptying corrosive substances. • Leave the syringe in the sample intake after injecting a sample! Otherwise, the sample will run out of the measuring cell.
	1. Never press on the measuring cell window! This can influence the oscillation characteristics of the measuring cell. 2. Do not clean the measuring cell with concentrated NaOH (caustic soda) or HF (hydrogen fluoride)! Both substances chemically corrode the measuring cell. 3. Use batteries of the specified type only. Otherwise, proper operation cannot be guaranteed. 4. Do not submerge the housing in liquid! The instrument is only resistant to splashed water. 5. Ensure that the following environmental conditions are met: • no strong vibrations present • not in direct sunlight • no high humidity present • no corrosive gasses present • temperature between – 20 °C and 70 °C • no strong electrical or magnetic fields present

3. Description of the Instrument

3.1 SBS-2500

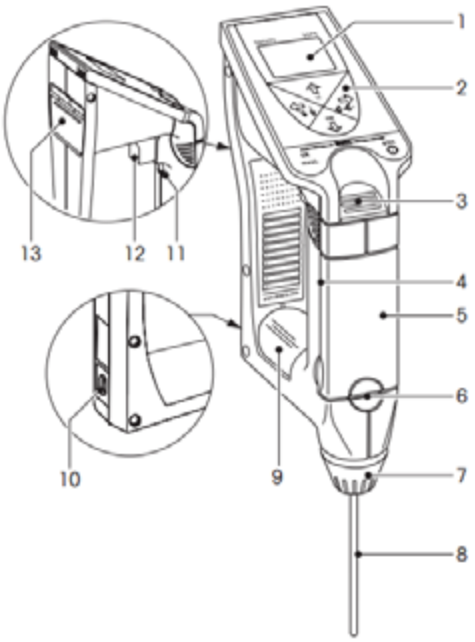

1. Backlit Display
2. Keypad
3. Drain button
4. Sample pump
5. Cover of sample pump
6. Connector for syringe adapter
7. Fixing screw for sample tube
8. Sample tube
9. Measuring cell
10. Infrared interface
11. Lock button
12. Fill button
13. Battery compartment cover

3.2 Display

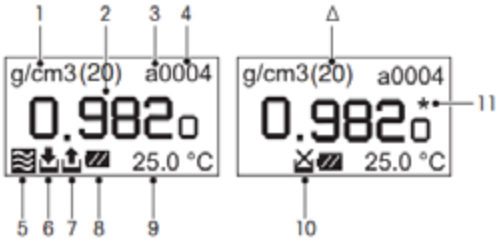

1. Selected unit of measurement
2. Result
3. Sample identification (a…z or space)
4. Sample number, or error number if an error has occurred
5. Appears if “Stability” is set to “Auto”
6. Appears if “Memory” in is set to “Auto”
7. Appears if “Memory” out is set to “Auto”. If a printer or PC is connected, the data are transferred automatically
8. Battery-power indicator
9. Temperature (°C / °F)
10. Appears if delete mode is activated
11. Mark for results
    For the identification of invalid or incorrect results or for marking a sample change

Δ Reference temperature (for the units “Comp. Density” and “SG” only)

3.3 Keys

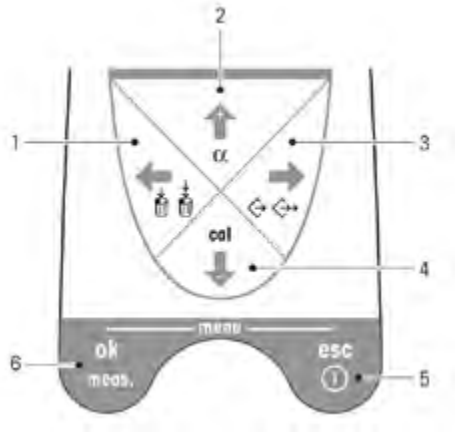

Red symbols: Press key longer than 2 seconds.
Blue symbols: Press key briefly.

No.	Symbol	Short Key Press	Long Key Press
1		• Move marker to the left • Mark saved results	• Delete saved results
2	α	• Move marker upward • Select sample number (ascends) • Switch between “Yes” and “No” setting	• Select temperature-compensation coefficient α
3		• Move marker to the right • Display saved results • Transfer one saved result to a printer/PC	• Transfer a series of saved results to a printer/PC
4	cal	• Move marker downward • Select sample number (descends) • Switch between “Yes” and “No” setting	• Call up adjustment mode
5	**esc**	Exit the menu	Switch instrument on or off
6	**ok/meas.**	• Start measurement • Confirm input • Confirm data delete • Confirm data transfer • While pressing and holding key 5: enter the menu	

Note

Only the arrow symbols are used to represent keys 1 – 4 in the following operation instructions.

4. Tutorial

4.1 Inserting Batteries

1. Open the battery compartment cover on the back of the SBS-2500.
2. Remove battery compartment.
3. Insert batteries into the battery compartment, observing correct polarity.
4. Insert battery compartment, ensuring that the contacts of the battery compartment face the instrument.
5. Close battery compartment cover.
6. The instrument switches on automatically and is immediately ready for operation.
7. With the backlighting switched off the battery lasts about 90 hours.

If nothing appears in the display, check the polarity of the batteries and battery compartment.

4.2 Configuration

Configuring the instrument for test measurement.

Entering the Menu
Press the keys "**ok/meas.**" and "**esc**" simultaneously.

The instrument switches to the "FUNCTION" menu, `Measure Unit` appears in reverse display (white on black).

Selecting Setting

- Confirm `Measure Unit` by pressing the "**ok/meas.**" key.
- Press the ↓ key repeatedly until `SG(t/t)` is marked.
- Confirm `SG(t/t)` by pressing the "**ok/meas.**" **key.**

Setting Date and Time

- Use the ↓ key to switch to "Date & Time".
- Confirm `Date & Time` with the "**ok/meas.**" key.
- To set the date, confirm Date with the "**ok/meas.**" key.
- Use the side arrows to select the number to change, and use the up and down arrows to change the value. Confirm with "**ok/meas**".
- Use the down arrow key to switch to "Time" and confirm with "**ok/meas**". Set the time as described above.

Exiting the Menu
Press the "**esc**" key.
The instrument is configured for test measurement.

4.3 Test Measurement

1. Push drain button (3) downward completely.
2. Ensure that the sample tube is located in the accompanying density standard or in distilled water.
3. Press the fill button (12) slowly to fill the measuring cell.
4. Ensure that no air bubbles are contained within the measuring cell.
5. Press the "**ok/meas.**" key.

The instrument automatically executes a measurement and the result appears in reverse display.
The result for water must be 1.000 in the selected measurement until SG (t/t).

If the deviation is < 0.0005
Adjustment is ok, the instrument is ready for measurement.

If the deviation is > 0.0005
Adjust instrument, see Chapter 4.4.

4.4 Adjustment

Initializing Adjustment

- Press and hold the ↓ key until **CALIB (Water)** appears on the display. The instrument adjusts automatically (duration: approximately 1 minute).
- After adjustment is completed, the measured deviation from the theoretical value and `Execute?` (**Nc**) appears.
- Press the ↑ or ↓ key. `Execute?` (**Yes**) appears.
- Press the "**ok/meas.**" key to confirm.

The adjustment is confirmed.

4.5 Cleaning

The built-in sample pump or an external syringe can be used to fill the measuring cell with cleaning liquid.

1. Empty the measuring cell completely before cleaning. Press the drain button downward completely
2. Clean the measuring cell daily with a suitable cleaning liquid.
3. For very dirty measuring cells, let the inside of the cell soak in the cleaning liquid.
4. Repeat cleaning if necessary.
5. If the housing is soiled, clean with a cleaning tissue.

4.6 Switching Off and On

Switching off
Press and hold the "**esc**" key until the display is turned off. The instrument is now turned off.

Switching on
Press and hold the "**esc**" key until the display appears. The instrument is ready for operation.

5. Menu

The menu of the SBS-2500 offers the following functions:

Measurement Unit (Measure Unit)	see Chapter 5.2
Temperature Unit (Temp. Unit)	see Chapter 5.3
Measure Mode	see Chapter 5.4
Adjust Mode (Calib. Mode)	see Chapter 5.5
Interface	see Chapter 5.6
Beep	see Chapter 5.7
Backlighting and LCD-Contrast (LCD)	see Chapter 5.8
Automatic Switch-off (Power)	see Chapter 5.9
Software Version (Version No.)	see Chapter 5.10
Date & Time	see Chapter 5.11
Identification	see Chapter 5.12

5.1 Using the Menu

Entering the menu
Press the keys "**ok/meas.**" and "**esc**" simultaneously.
The instrument switches to the menu

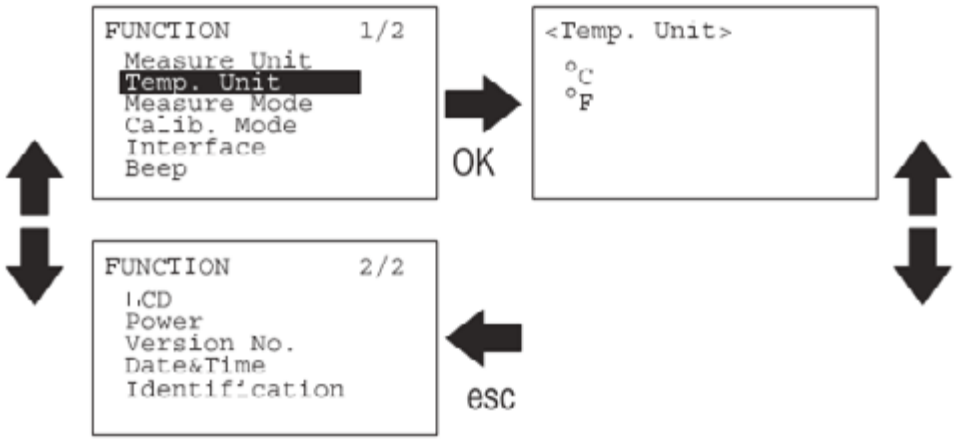

Selecting Functions

- Press ↓ and ↑ keys repeatedly until the desired function is marked.
- Press the "**ok/meas.**" key to activated the marked function.

The instrument switches to the corresponding submenu or activates the desired function.

Numerical Input

- Select decimal places with the ← and →keys.
- Change value with the ↓ and ↑ keys.
- Press the "**ok/meas.**" key to confirm the value.

Exiting the Menu
Press the "**esc**" key.

5.2 Measurement Unit (Measure Unit)

The following unites are available for selection:

Density
Available density units:
g/cm^3
lb/gal (US) 1 g/cm^3 = 8.3454 lb/gal
lb/gal (IP) 1 g/cm^3 = 10.0224 lb/gal

Comp. Density (Temperature-compensated density)
Density measurement in g/cm^3 at a reference temperature.

All results at the same reference temperature (T_0, e.g. 20° C), regardless of the measuring temperature (T).

Compensated density = measured density • $(1 + \alpha \bullet (T - T_0))$

10 temperature-compensation coefficients can be saved.

The following input is required:
Comp. No. Number of the temperature-compensation coefficient (0...9)
Comp. Temp. Reference temperature (T_0)
α x 1000 Temperature-compensation coefficient
For typical temperature-compensation coefficients, see Chapter 13.2; calculation of α, see page 11.

SG (t/t) (specific gravity)

$$SG\ (t/t) = \frac{\text{Density of the sample at T}}{\text{Density of water at T}}$$

T Measuring temperatures

SG (specific gravity, temperature-compensated)

$$SG = \frac{\text{Density of the sample, temperature-compensated for } T_0}{\text{Density of water at } T_1}$$

10 temperature-compensation coefficients can be saved.

The following input is required:
Comp. No. Number of the temperature-compensation coefficient (0...9)
Comp. T. T_0/T_1°C (enter temperatures T_0 and T_1)
α x 1000 Temperature-compensation coefficient
For typical temperature-compensation coefficients, see Chapter 13.2; calculation of α, see page 11.

API (American Petroleum Institute)
The measured values are converted to a reference temperature of 15°C or 60°F. This conversion is based on API tables: product group A: crude oil; product group B: fuel, petroleum products; product group D: lubricants. The result can be expressed as density (e.g. `APIA (Density)`), or directly in API degrees (e.g. `APIA (degrees)`).

Brix (Sucrose)
Measurement of the sucrose concentration, percent weight at 20°C.

Alcohol (Ethanol)
Measurement of the ethanol concentration in water, percent weight (Wt%) or percent volume (Vol%) at 20°C.

H2SO4 (Sulfuric acid concentration)
Measurement of the sulfuric acid concentration, percent weight at 20°C.

Baume (°Baumé scale)
Measurement in °Baumé (heavy Baumé for d > 1, light Baumé for d < 1) calculated to a reference temperature.

10 temperature-compensation coefficients can be saved. Input of temperature-compensation coefficients via Comp. Density. For typical temperature-compensation coefficients, see Chapter 13.2; calculation of α, see page 1.

Plato
Measurement of °Plato at 20°C.

Proof
Measurement of the Proof degree at 60°F.
The Proof degree is a unit used to determine the ethanol content.

Proof (US): Measurement with US unit (100v/v% = 200 US Proof).
Proof (IP): Measurement with IP unit (100v/v% = 175 British Proof).

Conc. (Concentrations)
Measurement of the concentration via the input of the desired concentration-conversion formula y = a + bx at a reference temperature.

y = concentration in % or without units
a, b = sample-dependent coefficients
x = measured density.

The following units are possible for x:
- 1/compensated density -1
- compensated density -1
- compensated density
- 1/specific gravity -1
- specific gravity -1
- specific gravity

Calculation of the temperature-compensation coefficient α
Measure density of the sample:
- at a temperature (T_1) above the normal measuring temperature,
- at a temperature (T_2) below the normal measuring temperature.

Calculate α according to the formula:
density at T2 = density at T1 • (1 + α • (T_1 - T_2))

or

$$\alpha = \left(\frac{\text{density at } T_{2-1}}{\text{density at } T_1} \right) / T_1 - T_2$$

Enter value α x 1000 into the instrument.

Note
The temperatures T_1 and T_2 have to be entered into the selected unit (°C or °F, see chapter 5.3).

Example
(measured) density at 26°C (T_1) 0.7844 g/cm³
(measured) density at 15°C (T_2) 0.7937 g/cm³

$$\alpha = \left(\frac{0.7937 - 1}{0.7844} \right) / 26 - 15$$

α = (1.011856 - 1) / 11 = 0.011856 / 11 = 0.001078

α x 1000 = **1.078**; enter this value into the instrument.

10 temperature-compensation coefficients can be saved. Input of temperature-compensation coefficients via Comp. Density. For typical temperature-compensation coefficients, see Chapter 13.2.

5.3 Temperature Unit (Temp. Unit)

Data in °C or °F (selectable).

5.4 Measure Mode

Configuration of sample identification, stability mode and method of data storage.

Sample Name — Sample identification.
A letter (a...z or space) can be set for the identification of samples.

Stability — Stability control.
- Auto: The result is accepted automatically when the display is stable.
- Manu: Result accepted by pressing the "**ok/meas.**" key.

Mode — Method of data storage.
- Labo: By pressing the "**ok/meas.**" key the result is saved and transferred (printer, PC).
- Field: By pressing the "**ok/meas.**" key the result is saved.
- Custom: User-defined setting.
  - Memory in: Save results.
    - Auto: Save result automatically.
    - Manu: Result saved by pressing the "**ok/meas.**" key
  - Memory out: Transfer result to PC or printer.
    - Auto: Transfer result automatically.
    - Manu: Transfer result by pressing the ➔ key.

5.5 Adjustment Mode (Calib. Mode)

Off — Adjust measuring cell with accompanying density standard or distilled water.

On — Adjust measuring cell with desired density standard.
The following input is required:
- Density: Density of the density standard (g/cm³) at the reference temperature
- Temp: Reference temperature
- α x 1000: Temperature-compensation coefficient of the density standard • 1000

5.6 Interface

PRN — Printer interface
Data transfer to printer
Printer with serial interface and connected infrared adapter. Results are formatted for output to a printer.
Transfer rate (baud rate), parity and stop and data bits must be configured according to the peripheral device.

THE FOLLOWING SETTINGS ARE REQUIRED FOR THE METTLER TOLEDO LC-P45 PRINTER:

Baud rate	9600
Parity	none
Stop bits	1
Data bits	8

RS — Serial interface. The Excel macro "PortableCapt" for data transfer to the computer via the infrared adapter is located on the CD.

IrDA — Data transfer to the PC with the integrated IrDA interface in accordance with protocol 1.20

5.7 Beep

Off — Beep off.

On — Beep on.

5.8 Background Lighting and LCD-Contract (LCD)

Backlighting
The backlighting is turned off automatically 5 seconds after the last time a key has been pressed (`Auto off`), or it is always off (`Always off`).

Contrast
Display contrast is adjustable to one of 9 levels with the ← → keys.

5.9 Automatic Switch-off (Power)

Off	Automatic switch-off is off. The instrument must be switched off manually.
On	The instrument switches off automatically if not operated for 10 minutes.

5.10 Software Version (Version No.)

The software version is displayed.

5.11 Date & Time

The settings for date and time can be edited here. The date is displayed in the format year/month/day (e.g. 2003/03/04 for March 4, 2003). Both date and time are included in the data transfer to a printer or computer.

5.12 Identification

An identification consisting of 10 letters and numbers (instrument name, user, etc.) may be entered here. This identification will be included in the data transfer to a printer or computer.

6. Measurement (meas)

6.1 Procedure for Proper Measurement

- Test the instrument for accuracy with the accompanying density standard or distilled water before beginning any measurements (See Chapter 4.3).
- Ensure that the measuring cell is clean before each measurement. Insufficient cleaning leads to remaining residue in the measuring cell and, therefore, incorrect results.
- Check the sample for chemical resistance of the instrument materials.

Sample tube:	PTFE (polytetrafluorethylene)
Measuring cell:	Borosilicate glass
Measuring cell holder:	PPS (polyphenylene sulphide)
Sample pump:	PP (polypropylene)

Ensure that the samples to be measured:
- Are liquid enough to be sucked up or injected;
- Can be dissolved with a solvent suitable for cleaning the measuring cell;
- Are homogeneous (no emulsions or suspended particles, no air bubbles);
- Have reached ambient temperature in the measuring cell.

For samples which are 20°C colder than the ambient temperature, heat the sample before beginning the sampling procedure.

Note

The unit display flashes when the difference in temperature between the sample and the ambient air is greater than ±5 °C

For samples of high viscosity (> 2000 mPa•s):

- Use an external syringe to fill the measuring cell.

6.2 Filling the Measuring Cell Using the Built-In Sample Pump

- Ensure that the sample tube is in the sample.
- Press the fill button (12) slowly to fill the measuring cell.
- Ensure that there are no air bubbles in the measuring cell.

6.3 Filling the Measuring Cell Using an External Syringe

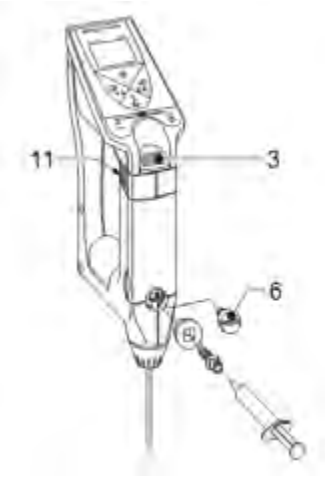

- Press the drain button (3).
- Slide up the lock button (11).
- Remove the screw stopper (6) with a coin.
- Screw in the adapter for the external syringe.
- Hold the sample tube over a waste container.
- Slowly inject the sample into the measuring cell.
- Ensure that there are no air bubbles in the measuring cell.
- Do not remove the syringe while measuring.

6.4 Measuring

The procedure is dependent upon the settings in the menu, see Chapter 5.4.

The ≋ symbol appears in the display: Measuring with automatic stability control

- Press the "**ok/meas.**" key to start measuring.

The ≋ symbol blinks during measurement. The result appears in reverse display.

The ≋ symbol does not appear on the display: Measuring with manual stability control

The instrument measures continuously.

- Wait until the displayed value stabilizes.
- If the result is to be saved: Press the "**ok/meas.**" key. The result appears in reverse display.

Measuring with Temperature-Compensation Coefficients (α)

(`Comp. Density`, `SG`, `Conc.` or `Baume` on the display)

- Press the ↑ key until a previously-saved temperature-compensation coefficient appears in the display, e.g. `α1=0.132`.
- Select the desired coefficient using the ↓ and ↑ keys.
- Confirm the selected coefficient with the "**ok/meas.**" key.
- Measure using either automatic or manual stability control.

Emptying the Measuring Cell

- Hold the sample tube over a waste container.
- Press drain button (3) downward slowly and move it up again with the fill button (12).

6.5 Saving the Results

The instrument can save up to 1100 results internally. Each time a result is saved, the number of internally-stored values increases by one.

The procedure for saving the results is dependent upon the settings in the menu (See Chapter 5.4).

The symbol appears in the display: Saving all results automatically
The instrument saves all results automatically.

The symbol does not appear in the display: Saving selected results manually

Save the result:

- Press the "**ok/meas.**" key.

Do not save the result:

- Press the "**esc**" key.

6.6 Displaying and Marking Saved Results

Displaying Saved Results

- Press the ← key.

The sample number flashes and the symbol appears.

- Scroll through the saved results using the ↑and ↓ keys.

Marking Results

For the identification of invalid or incorrect results or for marking a sample change.

- Select the desired sample number using the ↑and ↓ keys.
- Press the "**ok/meas.**" key.

The selected sample number is marked with an asterisk.

Note
The marking is removed if the sample has already been marked.

6.7 Printing and Transferring Results

Conditions

- The interface and peripheral device are configured properly, see Chapter 5.6 and Chapter 8.
- For PRN and RS interfaces, the infrared adapter must be connected to the printer/PC.

The procedure for printing and transferring results is dependent upon the settings in the menu (See Chapter 5.4).

Important

To transfer or print results, hold the instrument in the direction of the infrared adapter at a maximum distance of approx. 20 cm.

The symbol appears in the display: Printing or transferring results automatically

Every displayed result is transferred automatically.

The symbol does not appear in the display: Printing or transferring selected results manually

- Press the ➔ key.
- Select desired result with the ↑ or ↓ key.
- Press the **“ok/meas.”** key to transfer/print the result.

The symbol flashes and the result is transferred.

Printing and Transferring Results of a Series of Samples Manually

- Press and hold the ➔ key until **Memory out**, Execute? (**All**) appears in the display.
- Press the ↑ or ↓ key.
  Execute? (**Range**) appears.
- Press the **“ok/meas.”** key to confirm.
- Enter the desired series of samples (from ... to ...) using the arrow keys.

To transfer the series of samples:

- Press the **“ok/meas.”** key.

The sample series (from ... to ...) is confirmed. The symbol flashes and the results of the selected series of samples are transferred.

To Print or Transfer All Results Manually

- Press and hold the ➔ key until **Memory out**, Execute? (**All**) appears in the display.
- Press the **“ok/meas.”** key.

The symbol in the display flashes and all results are transferred.

After a successful transfer, the user is asked whether he/she would like to delete the transferred results:
Memory All Clear Execute? (**No**).

Leaving Transferred Results Intact

- Confirm **Memory All Clear** Execute? (**No**) by pressing the **“ok/meas.”** button.

Deleting Transferred Results

- Press the ↑ or ↓ key.
  Execute? (**Yes**) appears.
- Press the **“ok/meas.”** key to confirm.

All results are deleted.

6.8 Deleting Results

It is not possible to delete individual results with the SBS-2500.

Deleting all results

- Press and hold the ← key until `Memory All Clear` `Execute?` (`No`) appears in the display.
- Press the ↑ or ↓ key.
  `Execute?` (`Yes`) appears.
- Press the **“ok/meas.”** key to confirm.

All results are deleted.

7. Adjustment (cal)

Before adjusting

- Carry out a test measurement before adjusting the measuring cell (See Chap. 4.3).

Test measurement result < 0.9995 or > 1.0005

- Check if the measuring cell is dirty, clean if necessary and repeat the test measurement.

Test measurement result once again < 0.9995 or > 1.0005

- Readjust instrument.

7.1 Adjusting the Measuring Cell with Water

Settings in the menu

- `Calib. Mode: off`

Adjusting

- Ensure that the measuring cell and sample tube are clean.
- Fill the clean measuring cell with the accompanying density standard or distilled water and ensure that no air bubbles are allowed to enter.
- Press and hold the ↓ key until `CALIB (Water)` appears in the display.

The instrument adjusts automatically (duration: approx. 1 minute). After adjustment is completed, the measured deviation from the theoretical value and `Execute?` (`No`) appears.

Measured Deviation <0.001

Press the ↑ or ↓ key.
`Execute?` (`Yes`) appears.
- Press the **“ok/meas.”** key to confirm.

The adjustment is confirmed.

Measured deviation ≥ 0.001

- Check whether the measuring cell is dirty and if there are air bubbles.

Measuring cell is clean and contains no air bubbles:

- Press the ↑ or ↓ key.
  `Execute?` (`Yes`) appears.
- Press the **“ok/meas.”** key.

Measuring cell is dirty and/or contains air bubbles:

- `Execute?` (`No`) is confirmed by pressing the **“ok/meas.”** button.
- Clean the cell if necessary and readjust.

7.2 Adjusting the Measuring Cell with a Density Standard

If a different density range is to be used, the measuring cell can be adjusted using a density standard of your choice (e.g. toluene from the NIST, National Institute of Standards and Technology) instead of distilled water.

Setting in the Menu

- `Calib. Mode: On`
- Enter the following density standard values into the menu:

Density	Density of the density standard (g/cm³) at the reference temperature
Temp	Reference temperature
α x 1000	Temperature-compensation coefficient of the density standard • 1000

Adjusting

- Ensure that the measuring cell and sample tube are clean.
- Fill the clean measuring cell with the density standard (e.g. Toluene) ensuring that no bubbles are allowed to enter.
- Press and hold the up and down keys simultaneously until **CALIB (STD)** appears in the display.

The instrument adjusts automatically (duration: approx. 1 minute). After adjustment is completed, the measured deviation from the theoretical value and `Execute?` (**No**) appears.

Measured Deviation <0.001

Press the ↑ or ↓ key.
`Execute?` (**Yes**) appears.
- Press the **"ok/meas."** key to confirm.
The adjustment is confirmed.

Measured deviation ≥ 0.001

- Check whether the measuring cell is dirty and if there are air bubbles.

Measuring cell is clean and contains no air bubbles:
- Press the ↑ or ↓ key.
  `Execute?` (**Yes**) appears.
- Press the **"ok/meas."** key.

Measuring cell is dirty and/or contains air bubbles:
- `Execute?` (**No**) is confirmed by pressing the **"ok/meas."** button.
- Clean the cell if necessary and readjust.

7.3 Adjusting the Measuring Cell with Air

The SBS-2500 measures with the specified accuracy if the measuring cell is correctly adjusted with the accompanying density standard or distilled water.

Additional adjustment with air is generally not necessary, but is recommended when:
- The measuring cell is replaced,
- The displayed density of air is < 0.0007 g/cm³ or > 0.0015 g/cm³.

Setting in the Menu

`Calib. Mode: Off.`

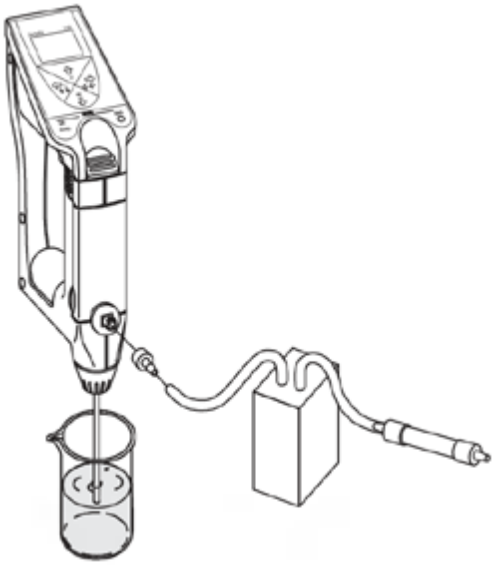

Preparing the Measuring Cell

- Clean the measuring cell with a suitable solvent and rinse with ethanol.
- Hold the sample tube over a waste container.
- Connect a tube from the connection of the external syringe to an air pump (volume flow 1…2 l/min) connected to dry tube filled with 5…10 g silica gel.
- Dry measuring cell for approx. 5…10 min.
- Wait approx. 30 min. until the measuring cell has reached the ambient temperature.

Adjusting

- Press the ↑ and ↓ keys simultaneously.

CALIB (Air) appears in the display. The instrument adjusts the measuring cell automatically.

Adjustment is complete when **CALIB (Air)** disappears (after approx. 2 min.).

- Adjust measuring cell with water or a density standard of your choice.

7.4 Adjusting the Temperature Display

Adjustment of the temperature display is generally not necessary, as the SBS-2500 was adjusted at the factory before shipment.
If the displayed temperature deviates from the actual temperature, carry out the following steps for adjustment:

- Check settings in the Measure Mode menu.
  `Stability: Manu`
  `Memory in: Manu`
- Switch instrument off.
- Set instrument aside for approx. one hour at a constant temperature.
- Switch instrument on.
- Press the **"ok/meas."** key briefly; the display appears in reverse.
- Read temperature on the instrument and from an external thermometer.
- Determine and log the difference between the actual temperature (external thermometer) and the temperature displayed on the instrument.
- Press the ↓ and → keys simultaneously.

CALIB (°C) or **CALIB (°F)** (depending on the selected temperature unit) appears, and the unit flashes.

- Enter the logged temperature difference (with sign) using the arrow keys.

- Press the **“ok/meas.”** key.

The temperature display is adjusted.

Example

Displayed value on instrument:	21.7 °C
Actual temperature:	21.3 °C
Difference:	21.3 °C – 21.7 °C = –0.4 °C
Value to be entered:	**–0.4 (°C)**

8. Interface

Using the infrared interface of the SBS-2500, the stored measurements together with the sample identification, the measurement unit, the temperature, the temperature compensation coefficient, the instrument identification, date and time can be printed out with a printer or transferred to a PC.

An infrared adapter or a PC/printer with an IrDA interface is required.

Important

Data transfer is only possible when:
• There is visual contact between the infrared adapter and the infrared interface;
• The distance between the SBS-2500 and the infrared adapter is no more than 20cm.

8.1 IR Printer Settings

Configure the infrared interface of the SBS-2500 as described in Chapter 5.6.

- Connect infrared adapter to printer.
- Switch printer on.
- Press the menu button on the printer.
- Set the following serial interface parameters, see the operating instructions for the printer:
  Baud rate: 9600
  Parity: None
  Stop bits: 1
  Data bits: 8

8.2 Data Transfer to PC

- Configure the infrared interface of the SBS-2500 as follows (Interface, See Chapter 5.6):
  Interface: RS
  Baud rate: 9600
  Parity: None
  Stop Bits: 1
  Data Bits: 8
- Connect the infrared adapter to an available serial interface (COM1, COM2,…) on the PC.
- Insert the accompanying CD-ROM in to the CD drive of the PC.
- Install the `PortableCapt` program (Excel macro).
- Start the `PortableCapt` program on the PC.
- In the Excel macro: select the serial interface (COM1, COM2, …) to which the infrared adapter is connected.
- For further procedures, see Chapter 6.7.

8.3 Data Format

If RS is selected as interface, the data is transferred in the following format:

Type		1)		Sample No.		2)	
Data column	STX		,		,		,
Start Byte = 0	1	1	1	4	1	1	1

Type	Date & Time 3)	
Data column		,
Start Byte = 10	16	1

Type	Result		Unit	
Data column		,		,
Start Byte = 27	7	1	10	1

Type	Temperature		4)		$\alpha^{6)}$	6)		α-value 6)	
Data column		,		,	A 5)		,		,
Start Byte = 46	5	1	1	1	1	1	1	5	1

Type	Identification			
Data column		CR	LF	EOT
Start Byte = 63	10	1	1	1

1) Sample identification (a…z, space)
2) If result is marked (*); otherwise, space
3) Format yyyy/mm/dd hh:mm
4) Temperature unit (°C or °F)
5) Number of the temperature-compensation coefficient
6) These bytes contain only spaces, unless Comp. Density, SG, °Baumé or Conc. is selected as the result unit

9. Error Messages and Malfunctions

Error	Possible Causes	What to Do
E-01	Adjustment error: • Measuring cell not filled with water • Air bubbles in measuring cell • Sample tube defective • Measuring cell is dirty • Measuring cell defective	• Fill measuring cell with water • Use bubble-free, distilled water • Replace sample tube • Clean measuring cell • Call SBS Test Equipment Service
E-02	Measuring cell fault • Measuring cell is dirty • Measuring cell is defective	• Clean measuring cell • Call SBS Test Equipment Service
E-03	Sample temperature not measured correctly	• Call SBS Test Equipment Service
E-04	Error in ambient temperature measurement	• Call SBS Test Equipment Service
E-05	`Full` appears instead of a sample number: Data memory full	• Delete data from memory
E-06	Memory Fault	• Call SBS Test Equipment Service
E-07	Measuring time of 10 minutes exceeded	• Switch instrument off and on again • Measure using bubble-free, distilled water If error appears again: Call SBS Test Equipment Service
BATT	Batteries empty	Replace batteries (see Chapter 4.1)
	Result = 0.0000 or strongly negative results: Menu setting incorrect	Set `Calib. Mode` to `off`

10. Cleaning and Maintenance

10.1 Cleaning the Measuring Cell

The built-in sample pump or an external syringe can be used to fill the measuring cell with cleaning liquid.

- Clean measuring cell daily with a suitable cleaning liquid.
- For a very dirty measuring cell let the inside of the cell soak with cleaning liquid.
- Repeat cleaning if necessary.

10.2 Cleaning the Housing

- Never use aggressive liquids or solvents to clean the housing of the SBS-2500.
- We recommend that you use the cleaning tissues which come with the instrument.

10.3 Replacing the Sample Tube

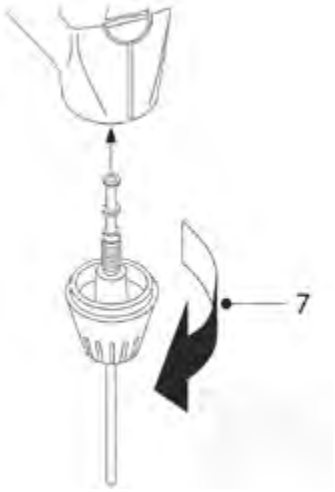

- Loosen fixing screw (7) of sample tube in the direction of the arrow and remove old sample tube.
- Insert new sample tube with washer into screw gland of sample tube.
- Tighten screw gland of sample tube to instrument by hand.
- Check sample tube for secure seating.

10.4 Replacing the Sample Pump

Removing cover of sample pump

- Slightly press together cover of sample pump on grip recesses and detach it.
- Pull sample pump out of guide system.

Inserting sample pump

- Insert new sample pump into guide system

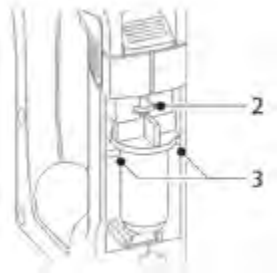

Ensure that the pump plunger (2) and pump body (3) are situated in the corresponding guides when inserting the sample pump.

- Check for proper functioning of sample pump.
- Put the cover of the sample pump back in its place.

11. Standard Equipment

The instrument is delivered pre-assembled with the following equipment.

1	**SBS-2500**	
2	**AAA Batteries (LR03, 1.5V)**	
1	**CD-ROM**	
1	**Operating instructions**	
1	**IR Adapter**	

12. Technical Data

Measurement principle	Density measurement using the oscillating body method
Sample intake	Using the built-in sample pump or an external syringe
Range of density measurement	0.0000 - 2.0000 g/cm^3
Accuracy	±0.001 g/cm^3
Resolution	0.0001 g/cm^3
Working temperature	5° - 35°C
Storage temperature	-20°C - 70°C
Temperature accuracy	±0.2°C
Measurement range Brix (d)	0.0 - 84.0%
Accuracy	±0.3%
Measurement range Ethanol (d) wt%	0.0 - 100.0%
Accuracy	±1.0%
Measurement range Ethanol (d) vol%	0.0 - 100.0%
Accuracy	±1.0%
Measurement range H_2SO_4	0.0 - 100.0%
Accuracy	±1.0%
Measurement range light Baumé	10 - 100 °Baumé
Accuracy	±0.4 °Baumé
Measurement range heavy Baumé	0 - 72 °Baumé
Accuracy	±0.1 °Baumé
Measurement range Plato	0.0 - 20.0%
Accuracy	±0.3%
Measurement range Proof (US)	0.0 - 200.0
Accuracy	±2.0
Measurement range Proof (IP)	0.0 - 175.0
Accuracy	±1.75
Display	Backlit LC-Display
Materials	
Housing	PBT (polyester)
Measuring cell	Borosilicate glass
Wetted parts	PTFE (polytetrafluorethylene)
	Borosilicate glass
	PPS (polyphenylene sulfide)
	PP (polypropylene)
Weight	Approx. 360g
Measuring time per sample	1 - 10 minutes
Data memory	1100 results
Interface	Infrared for printer and PC
Battery operation	2 x 1.5 V batteries (LR03); type AAA
Battery lifetime	Approximately 90 hours (with backlighting off)

Subject to technical changes.

13. Appendix

13.1 Density of Water (0 °C to 40 °C)

Temperature °C	Density g/cm³
0	.99984
1	.99990
2	.99994
3	.99996
4	.99997
5	.99996
6	.99994
7	.99990
8	.99985
9	.99978
10	.99970
11	.99961
12	.99950
13	.99938
14	.99925
15	.99910
16	.99894
17	.99878
18	.99860
19	.99841
20	.99821
21	.99799
22	.99777
23	.99754
24	.99730
25	.99705
26	.99679
27	.99652
28	.99624
29	.99595
30	.99565
31	.99534
32	.99503
33	.99471
34	.99438
35	.99404
36	.99369
37	.99333
38	.99297
39	.99260
40	.99222

[Chemical Handbook Fundamental Version, Rev. 3, Table 5.2 (1984)]

13.2 Temperature-Compensation Coefficients α

Substance	**Temperature Range (°C)**	**α • 10^3 / °C**
Water	15 - 30	0.23
Ethanol	0 - 30	1.09
m-xylene	0 - 30	0.99
p-xylene	15 - 30	1.02
Glycerine	15 - 30	0.49
Chloroform	0 - 30	1.26
Carbon tetrachloride	0 - 30	1.22
Toluene	0 - 30	1.07
Benzene	6 - 30	1.21
Methanol	6 - 30	1.18
Acetone	0 - 30	1.42
Bromobenzene	0 - 30	0.91
Cyclohexane	0 - 30	1.20
Isopropanol	0 - 30	1.06
n-nonane	0 - 30	1.08