STORAGE BATTERY SYSTEMS, LLC.

Rack-Info

Rack Type
EQ-SGX2-57H
Rack dimensions
Length = 224.41 inch
Width = 26.18 inch
Height = 23.23 inch
B = 22.64 inch
Part list

```
6   x EQ-SGX2
5   x EB0714
1   x 2S-STT-SET
0.5 x 904
2   x 1204
1   x 904C
4   x 1204C
```
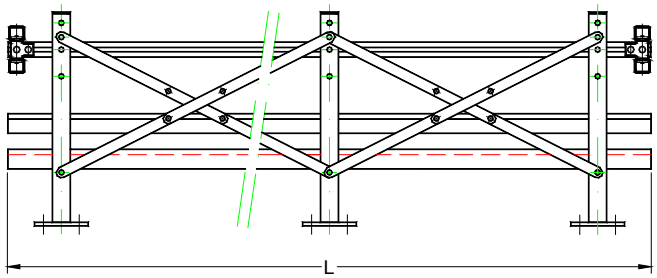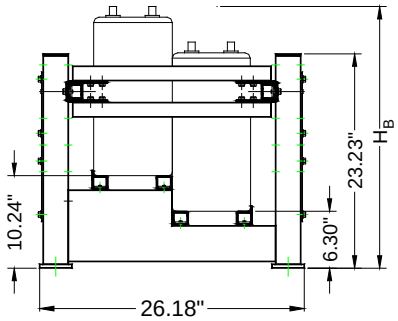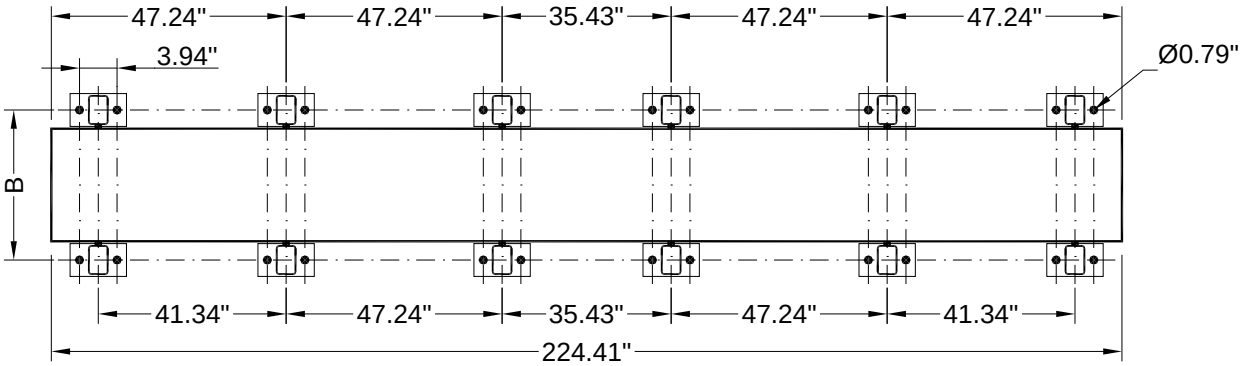
Rack-Weight
449.2 lbs